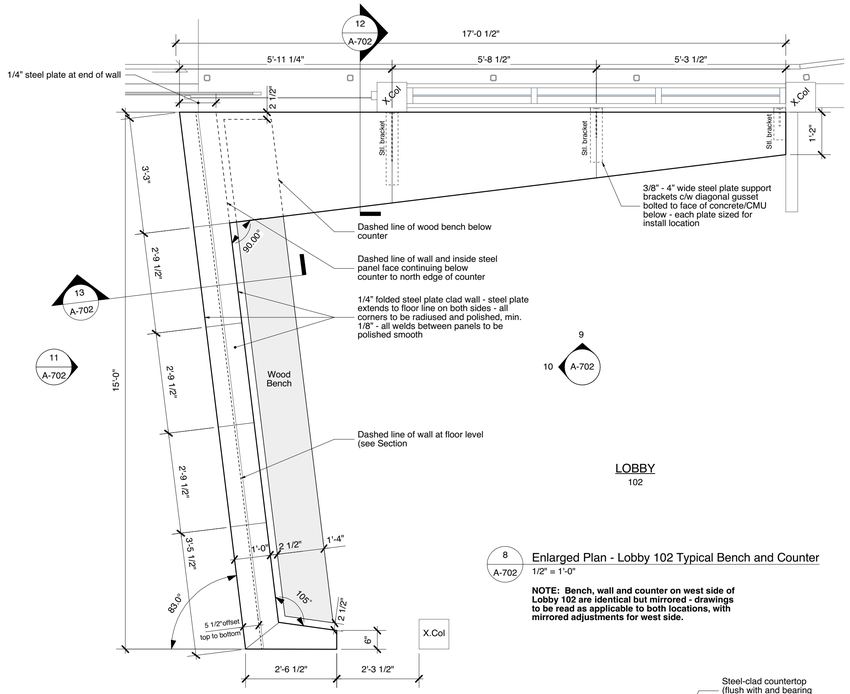


LOBBY
102

8 A-702 Enlarged Plan - Lobby 102 Typical Bench and Counter
1/2" = 1'-0"

**NOTE: Bench, wall and counter on west side of Lobby 102 are identical but mirrored - drawings to be read as applicable to both locations, with mirrored adjustments for west side.**

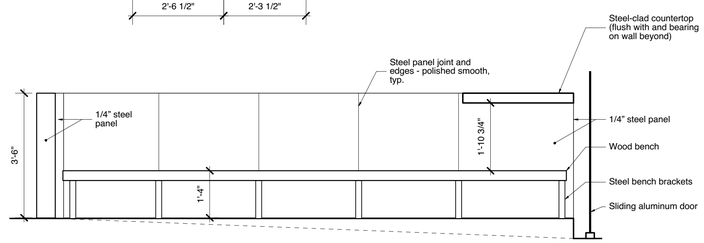


10 A-702 Elevation - Lobby 102 Bench and Counter - West
1/2" = 1'-0"

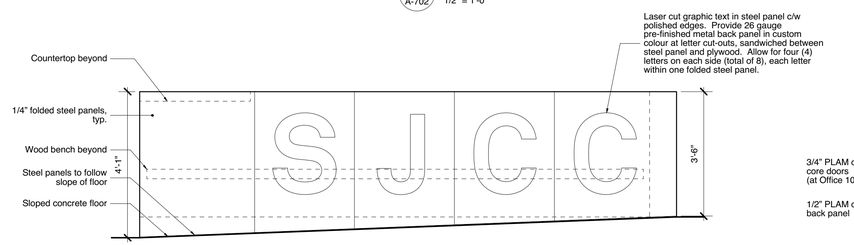


11 A-702 Elevation - Lobby 102 Bench and Counter - West
1/2" = 1'-0"

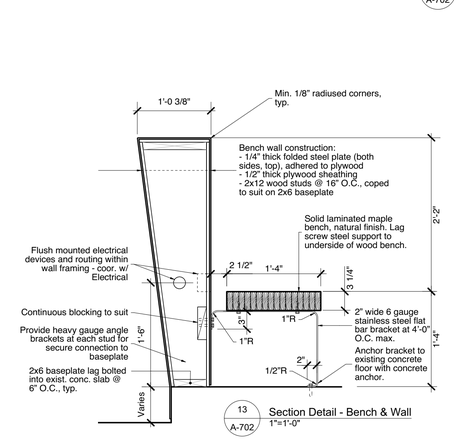


13 A-702 Section Detail - Bench & Wall
1"=1'-0"

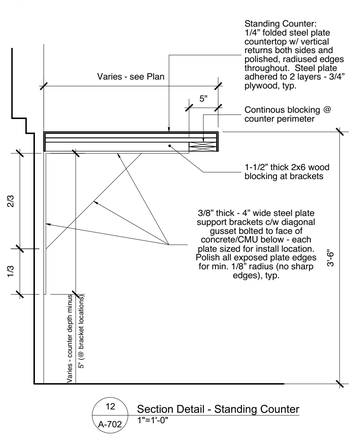


12 A-702 Section Detail - Standing Counter
1"=1'-0"

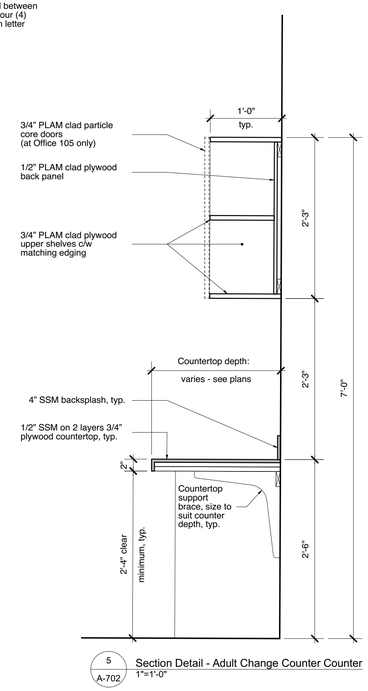


5 A-702 Section Detail - Adult Change Counter Counter
1"=1'-0"

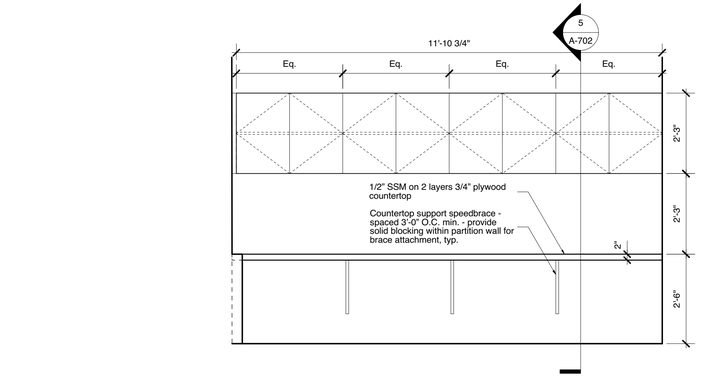


6 A-702 Elevation - Office 105 Counter and Millwork
1/2"=1'-0"

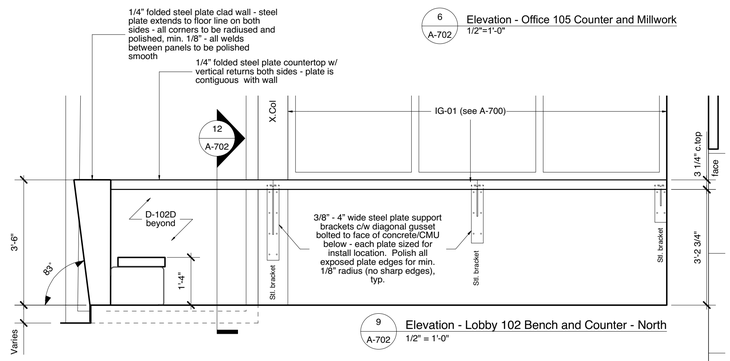


9 A-702 Elevation - Lobby 102 Bench and Counter - North
1/2" = 1'-0"

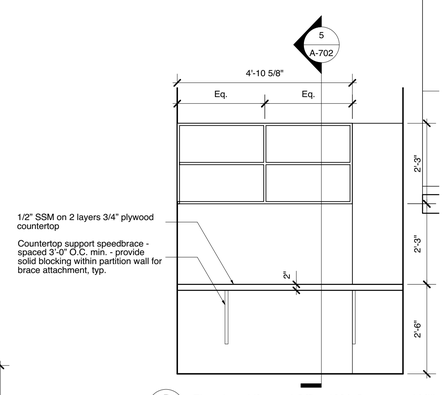


7 A-702 Elevation - Lifeguard Office 103A Counter and Millwork
1/2"=1'-0"

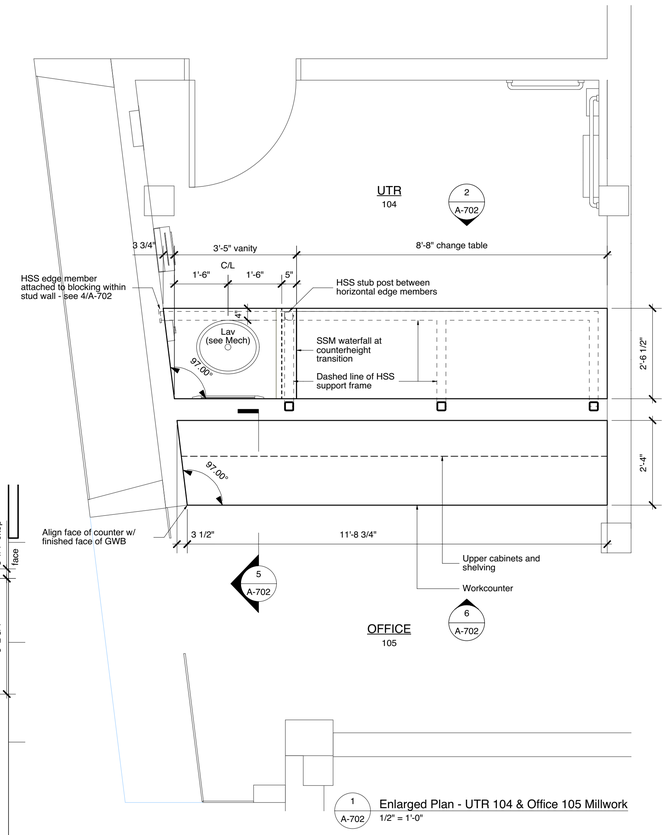


1 A-702 Enlarged Plan - UTR 104 & Office 105 Millwork
1/2" = 1'-0"

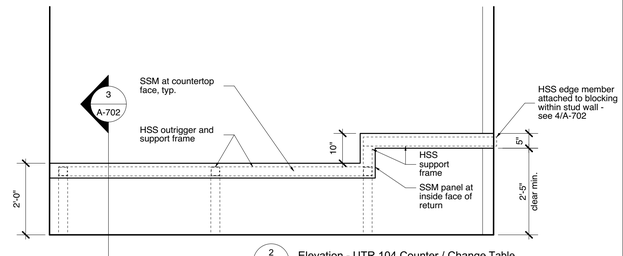


2 A-702 Elevation - UTR 104 Counter / Change Table
1/2"=1'-0"

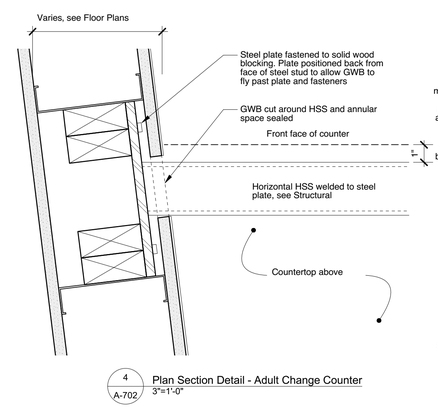


4 A-702 Plan Section Detail - Adult Change Counter
3"=1'-0"

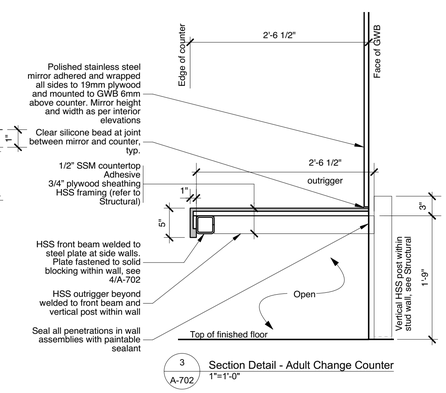


3 A-702 Section Detail - Adult Change Counter
1"=1'-0"


PUBLICCITY
Public City Architecture Inc
11-600 Clifton Street
Winnipeg, Manitoba
R3G 2X6 204 475 9323
publiccityarchitecture.com


Owner

The City of Winnipeg
185 King Street
Winnipeg, MB
R3B 1J1

| Rev. No. | Date | Revision Notes |
|---|---|---|
| 0. | 2019.11.06 | Issued for Construction |

This drawing must not be scaled. The contractors shall verify all dimensions and other data on site prior to commencement of work. Discrepancies, errors, and omissions are to be reported to Public City Architecture Inc. prior to proceeding with the Work.

Drawings and specifications as instruments of service are the property of Public City Architecture Inc.; the copyright in the same being reserved.

No reproduction or revision to these drawings may be made without the permission of Public City Architecture Inc., and when made, must bear their name. All prints to be returned to Public City Architecture Inc. upon request.


Project

St. James Civic Centre
Phase 2 Building Systems Uprades

Drawing

Millwork and Details

| Drawn By | Reviewed By |
|---|---|
| AL | PS |
| Scale | Tender No. |
| As Noted | 1176-2019 |
| Date | Drawing No. |
| Nov. 6, 2019 | A-702 |